1. For the circuit below, find:

a [10] I_B = 2.2μA
b [4] I_C = 439.7μA
c [4] I_E = 441.9μA
d [4] V_E = .3801V
e [6] V_{CE} = 13.02
f [10] V_{out} = 13.4
g [2] Approx. gain = 17.4

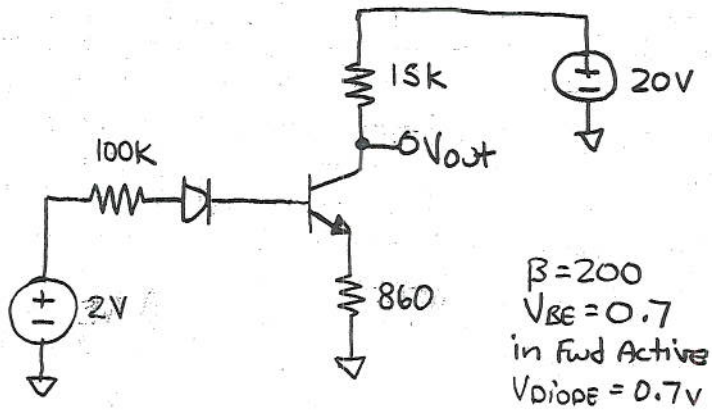

$\beta = 200$
$V_{BE} = 0.7$
in Fwd Active
$V_{DIODE} = 0.7V$

a. $-2 + 100000 I_B + 0.7 + 0.7 + 201 I_b (860) = 0$

$2.729 \times 10^{6} I_b = .6$

$I_b = 2.2\mu A$

b. $I_c = \beta I_b = (200) 2.2\mu A = 439.7\mu A$

c. $I_e = (\beta + 1) I_b = 201 (2.2\mu A) = 441.9\mu A$

d. $V_e = 860 (441.9\mu A) = .3801V$

e. $V_{ce} = V_c - V_e = [20 - (15000)(439.7 \times 10^{-6})] - .3801$

$V_{ce} = 13.02V$

f. $V_{out} = [20 - (15000)(439.7 \times 10^{-6})]$

$= 13.4V$

g. gain $\approx 15/.86 = 17.4$