#13 (6 pts) Determine I_y, V_{5k}, and power generated by -6V Source.

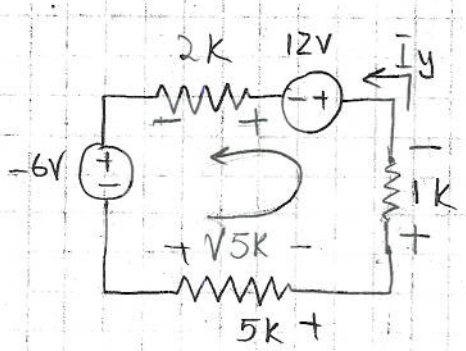

$$\sum V_{across\ branches} = 0$$

$$V_{5k} + V_{1k} + 12 + V_{2k} + (-6v) = 0$$

$$I_y \times 5k + I_y \cdot 1k + 12 + I_y \cdot 2k - 6v = 0$$

$$I_y(5k\Omega + 1k\Omega + 2k\Omega) = -6\ \text{Volts}$$

$$I_y = \frac{-6\ \text{Volts}}{8k\Omega} = -.75\ mA$$

$\boxed{I_y = -.75mA}$ (2pts)

$$V_{5k} = I_y \times 5k\Omega = -.75mA \times 5k\Omega = -3.75\ \text{volts}$$

$\boxed{V_{5k} = -3.75\ \text{Volts}}$ (2pts)

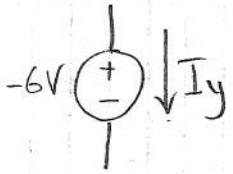

$$P = I_y \times (-6v) = (-.75mA)(-6\ \text{Volts}) = 4.5mW$$

$\boxed{P = -4.5\ mW}$ (2pts)