5. For the circuit below, draw $|Vout|$ and the current $|I_{src}|$ for frequencies from 0 to 2 Ghz. Use the same vertical axis for voltage and current. The resonant frequency is found at: $f_0 = \frac{1}{2\pi\sqrt{LC}}$

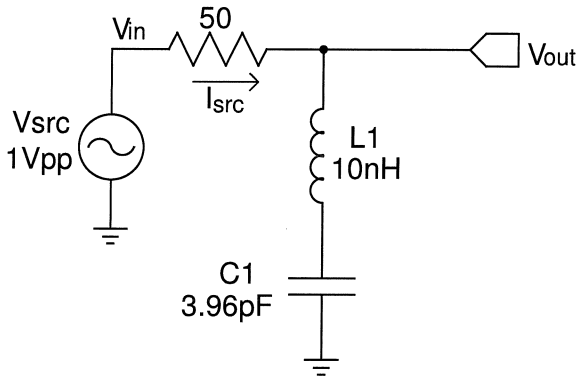

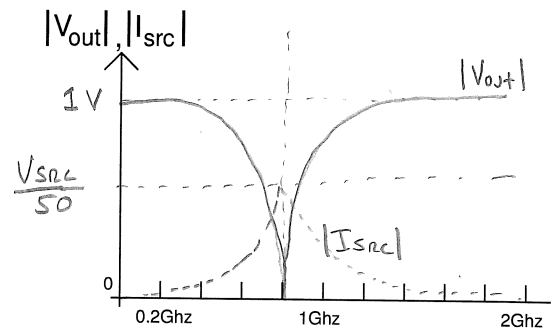

Resonant frequency of series network is $f_0 = \frac{1}{2\pi\sqrt{LC}}$

$$f_0 = \frac{1}{2\pi\sqrt{(10\times10^{-9})(3.96\times10^{-12})}} \simeq 800\,\text{MHz}$$

Series network $Z_{in}=0$ at resonance so at 800 MHz $V_{out} \to 0$

At 800 MHz $I_{SRC} = \frac{V_{SRC}}{50}$