ECE 391: Suggested Homework Problems

Reflections

1. Multiple digital devices wish to communicate over a shared 50Ω transmission line. Only one driver will be enabled at any time and any receiver may be listening. Each bidirectional driver/receiver pair on the line has an output impedance of ($Zout < 2$) and an input impedance of ($Zin > 200K\Omega$). The input receivers logic one input threshold is $\frac{Vdd}{2}$ and should not see voltages above Vdd. Determine what terminations if any are necessary at locations A,B,C and D, to create a reflection-free network. Show a circuit diagram for your design.

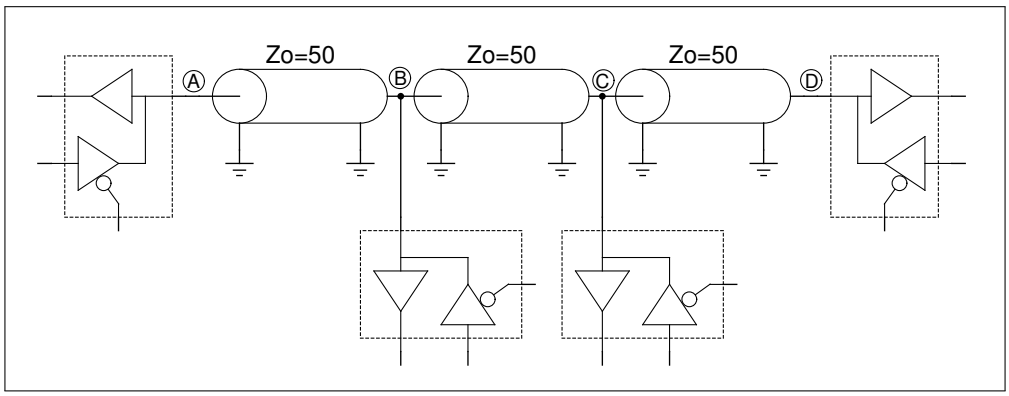

Figure 1: Problem 1

2. For the transmission line circuit shown in figure 2:

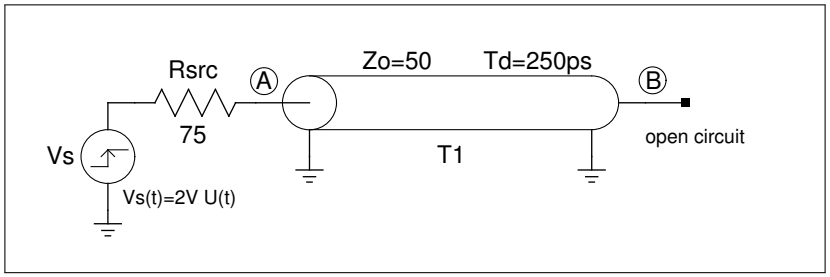

Figure 2: Problem 2

(a) draw a lattice diagram from $t = 0ns$ through $t = 1.75ns$.
(b) simulate the circuit in ngspice for 1.7ns showing the steps at the initial rising edge at the driver end, and at the receiver end of the transmission line.

3. Consider the transmission line circuit shown in figure 3 with $V_g(t) = 30u(t)(V)$, $R_g = 150$, $Z_0 = 75$, length $z_r = 20m$, and velocity factor $v_p = 0.66c$.

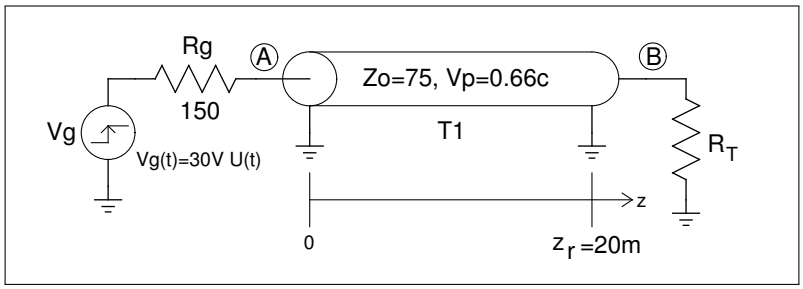

Figure 3: Problem 3

(a) Draw a lattice diagram and plot the voltage and current waveforms at $z = 0$, $z = 0.75z_r$, and $z = z_r$ for $0 \leq t \leq 430nsec$ for the cases (i) $R_T = 0$, (ii)$R_T = 15$, and (iii) $R_T = 125$.
(b) Simulate the circuits in ngspice and compare with your results.
(c) What are the final values of voltage and current (i.e., for $t \to \infty$) for the three terminations?

4. An uncharged, lossless coaxial transmission line with $\epsilon_r = 4$ is short-circuited at its far end ($z = z_r$). At time $t = 0$, the near end of the cable ($z = 0$) is connected through a series resistance R_g to an ideal source of V_g volts. A finite portion of the voltage observed at the input (near end) of the line is shown below. A shorter portion of the corresponding current is also shown.

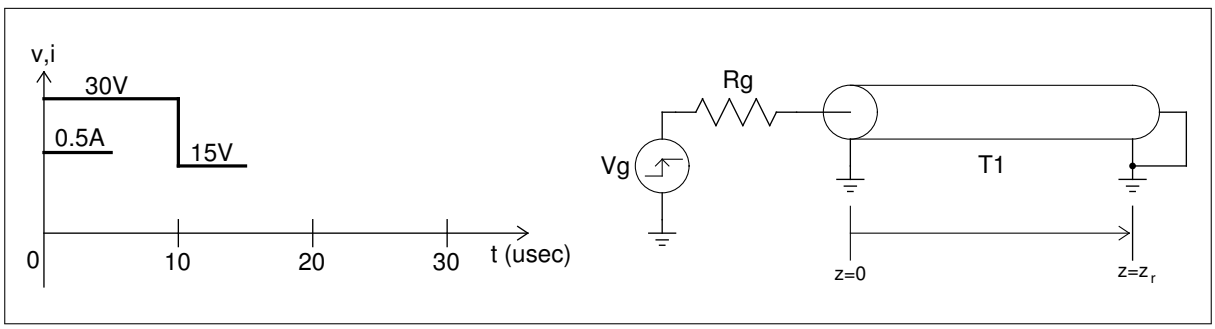

Figure 4: Problem 4

Find the numerical values of:
(a) velocity of propagation, v_p
(b) the length of the line, z_r
(c) the T-line characteristic impedance, Z_0
(d) the reflection coefficient at the generator and termination sides (Z_g and Z_t)
(e) the series resistance at the source R_g
(f) the source voltage, V_0.
(e) Draw a lattice diagram and complete the voltage and current waveforms up to time $t = 25\mu sec$. Specify the explicit numerical values of voltage and current.

(f) Simulate the circuit in ngspice and compare your voltage and current waveforms obtained earlier with the Spice simulation results.
(g) What are the final values of voltage and current (i.e., for $t \to \infty$) at the near end and far end?

5. For the following circuit:

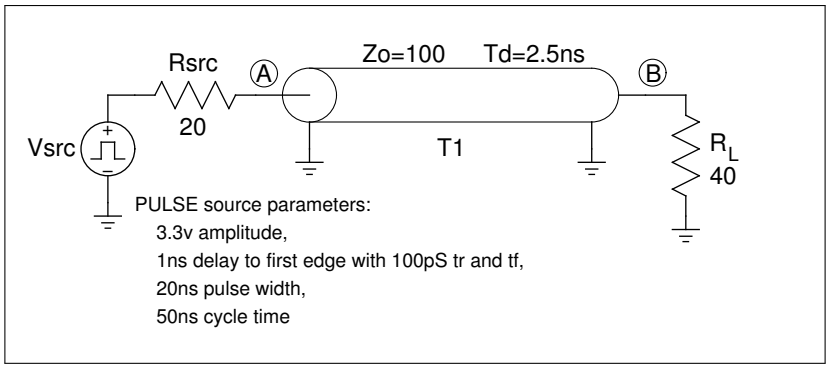

Figure 5: Schematic

(a) Draw the lattice diagram that shows the voltage at points "A" and "B" for 10ns. On your lattice diagram, show the magnitudes of the reflections for both current and voltage and the total voltages at both "A" and "B".
(b) Using your lattice diagram, draw a voltage versus time graph of the voltage waveforms at "A" and "B".
(c) Confirm the correctness of your waveforms in part b by running an ngspice simulation.
(d) Repeat all the above with $R_L = 200\Omega$.

6. A lossless transmission line cable ($Z0 = 50, vp = 200m/sec$) is suspected to be damaged at an unknown distance d from the input. The cable is terminated in a matched resistance $R_T = 50\Omega$. In order to find the location of the damaged cable, a step voltage is applied at the input at time $t = 0$, and the voltage waveform is observed at the input of the cable. The step-voltage generator is matched to the transmission line ($R_G = 50$).

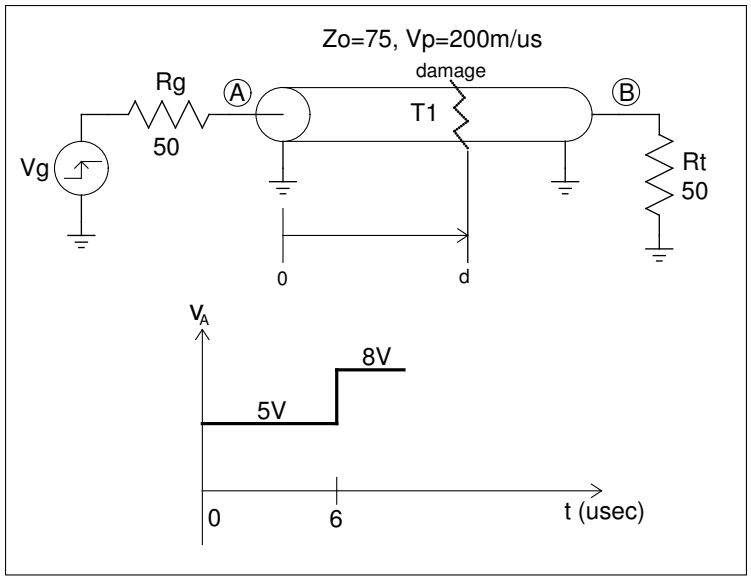

Figure 6: Schematic and Waveform

(a) What are the voltage and current amplitudes of the first outgoing wave?
(b) Determine the generator voltage.
(c) Determine distance d at which the cable is damaged.
(d) Determine the voltage of the returning wave (reflected at the damaged location).
(e) What is the reflection coefficient at the location of the damaged cable?
(f) How would you model (equivalent circuit model) the damaged section of the cable?

7. An engineer started the lattice diagram shown below but was distracted and never finished his work. Given the information below, find:
   (a) ρ_L
   (b) R_L
   (c) Z_o
   (d) t_d
   (e) R_s
   (f) V_s

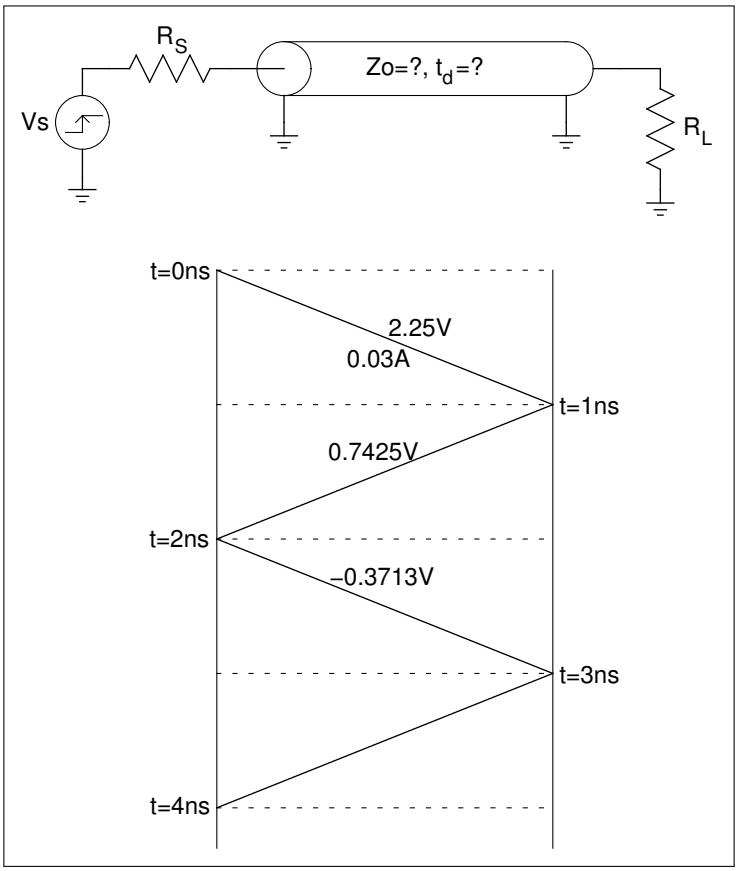

Figure 7: Unfinished Lattice Diagram

8. For each waveform below at point "A", circle the correct circuit parameters. Dotted lines extending from a waveform indicate the waveform will continue its present behavior.

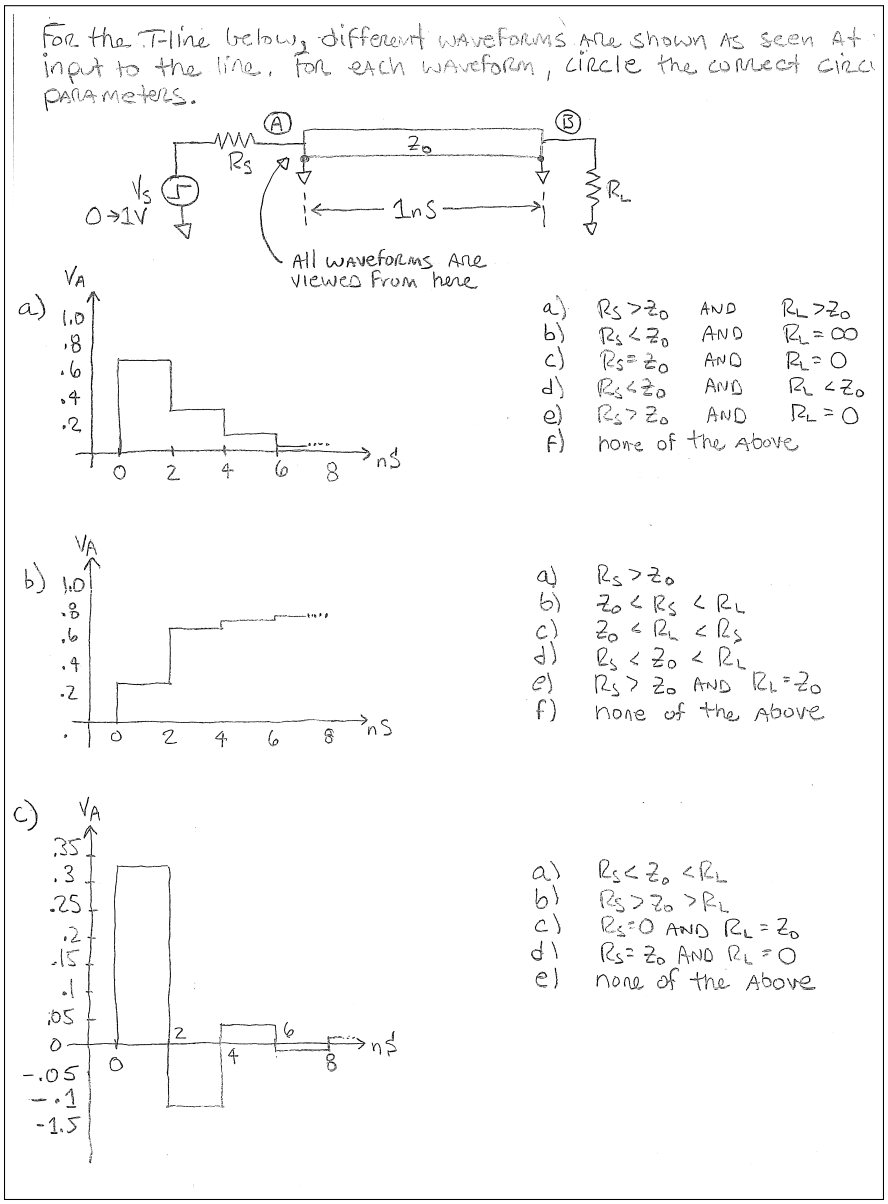

Figure 8: Reflections at "A"

9. Consider the circuit and spice waveform for point "A" below. The generator launches the rising edge at 5ns. Find:
   (a) The flight time delay t_f of the transmission line.
   (b) R_S
   (c) R_L

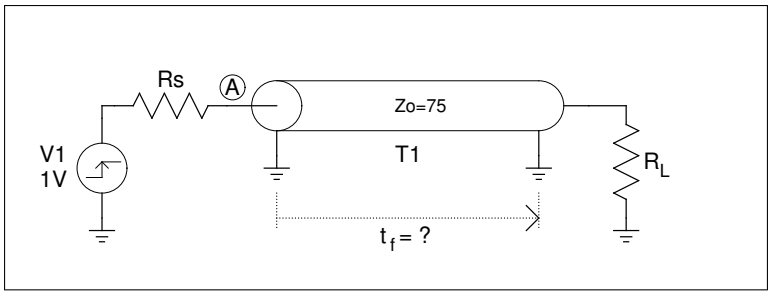

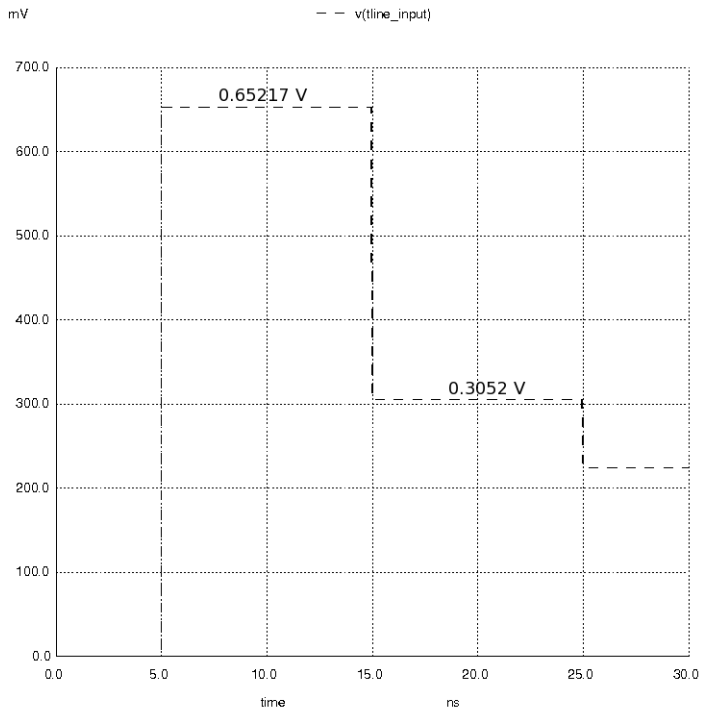

10. Consider the circuit below. T1 is a lossless transmission line with $Z_o = 50\Omega$ $t_d = 5ns$.

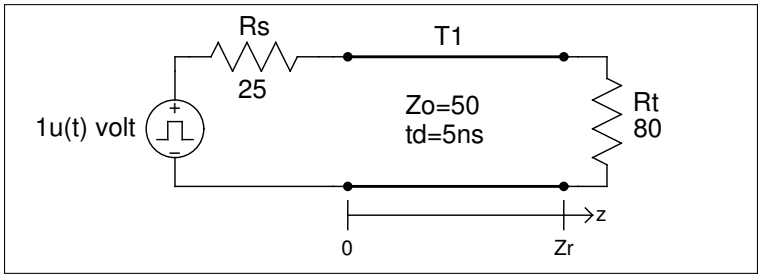

(a) Determine ρ_s and ρ_l.
(b) Fill in the numerical voltage and current values for the first three wave components and add the time and length scales in the lattice diagram shown below. Include units as appropriate.

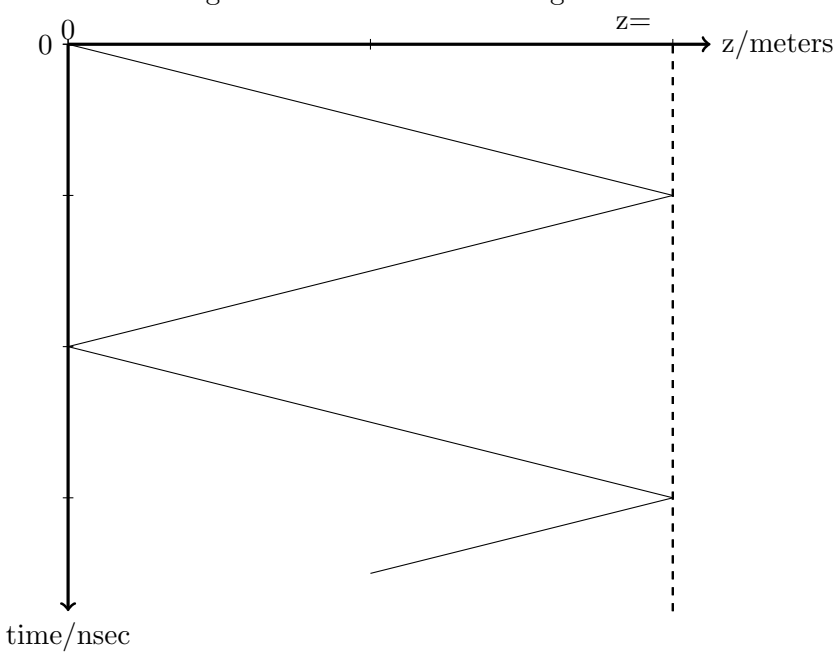
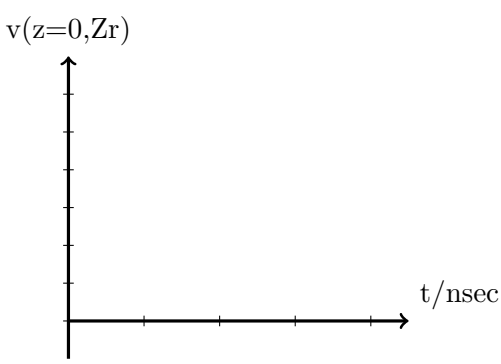
(c) Sketch the voltage at the beginning and end of the line ($z = 0$) and ($z = Z_r$) for $0 \leq t \leq 15ns$. Include voltages and time on the axes. Indicate voltage levels that do not fall on the axis marks.